REDROCK PRECAST PHONE NUMBER 218-723-8881

www.redrockprecastmn.com

300 GALLON SINGLE

TAB. NO.	DESCRIPTION
	WC001300

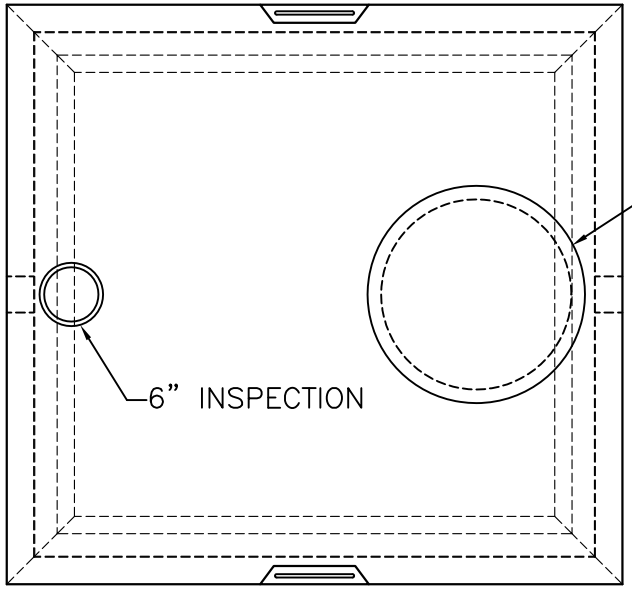

PROPERTIES:

LID:

VOLUME OF CONCRETE: .35 YD.

WEIGHT: 1,418 LBS.

TANK:

VOLUME OF CONCRETE: .75 YD.

WEIGHT: 3,050 LBS.

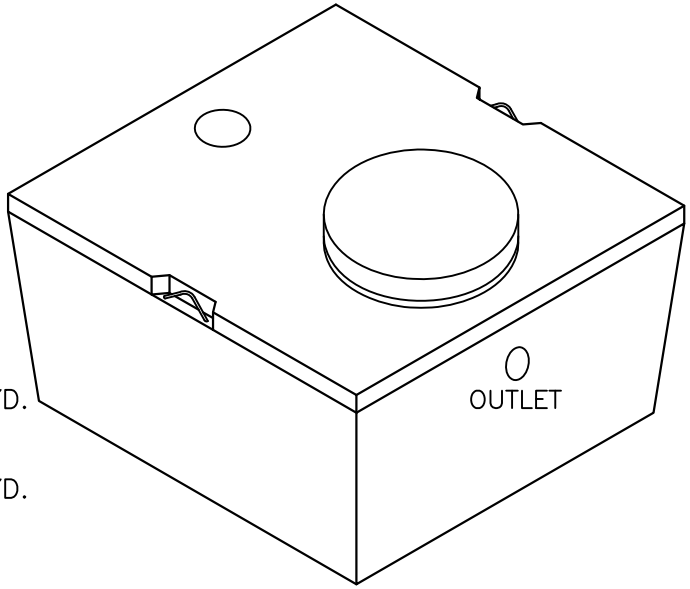

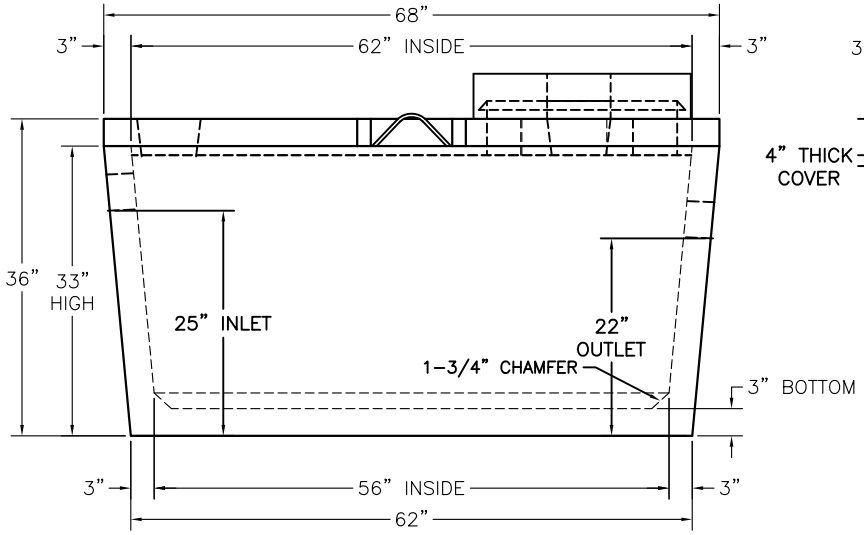

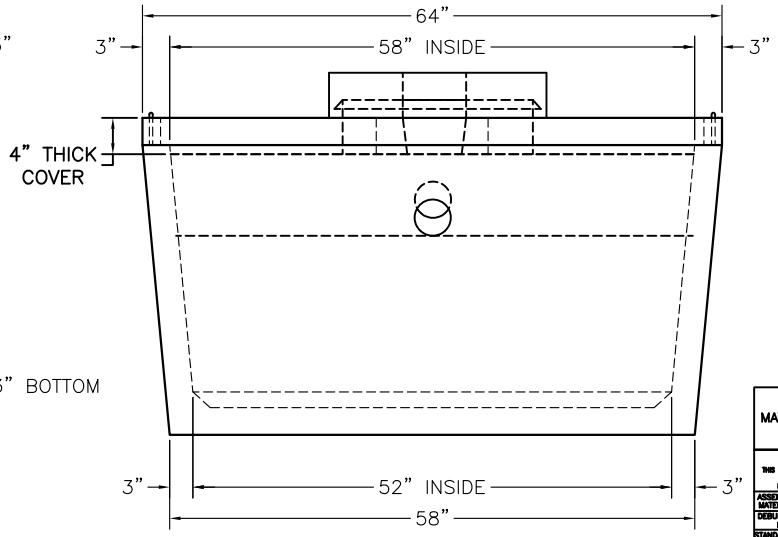

MATERIAL:	REDROCK PRECAST

REDROCK PRECAST
THIS DRAWING CONTAINS CONFIDENTIAL AND PROPRIETARY INFORMATION OF RBI NOT TO BE USED BY OR DISCLOSED TO ANY OTHER INDIVIDUAL OR LEGAL ENTITY WITHOUT AUTHORIZATION OF A REPRESENTATIVE OF RBI

ASSEMBLIES, WELDMENTS, AND RAW MATERIAL TO BE FREE OF RUST
DEBURR & REMOVE ALL SHARP EDGES AND CORNERS
STANDARD TOLERANCES & NOTES UNLESS OTHERWISE SPECIFIED
DIMENSIONS ARE IN INCHES
UNSPECIFIED TOLERANCES
.X ± .XXXX ±
.XX ± ANGLES ±
.XXX ± FRACTIONAL ±

ORIG. RAJ DATE 2011
CHKD.
APPD.
APPR. WEIGHT
MATERIAL
FINISH

TITLE 300 GALLON SANITARY VAULT
GROUP
DO NOT SCALE DRAWING
SIZE D NUMBER WC001300 REV .
SCALE FULL REF SHT OF