REDROCK PRECAST PHONE NUMBER 218-723-8881

www.redrockprecastmn.com

500 GALLON (1)

TAB. NO.	DESCRIPTION
	WC001202

REVISIONS

REV	ECO NO.	DESCRIPTION	DWN.	DATE	CHKD.	APPD.

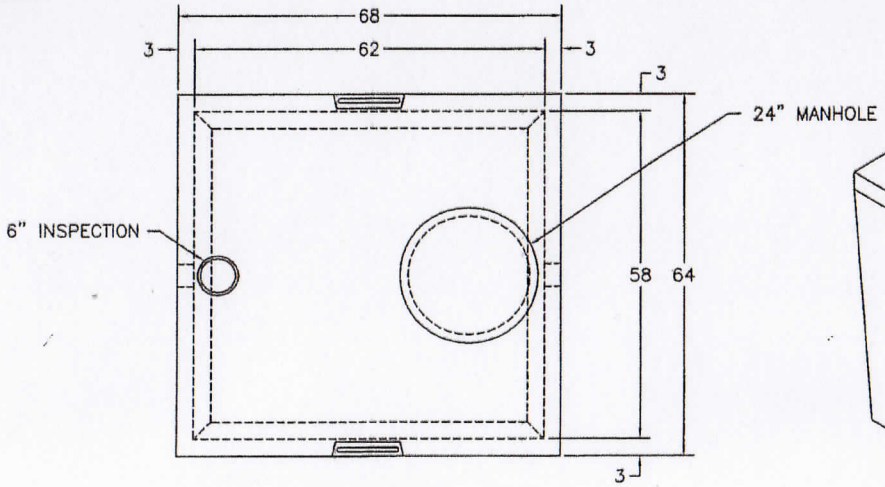

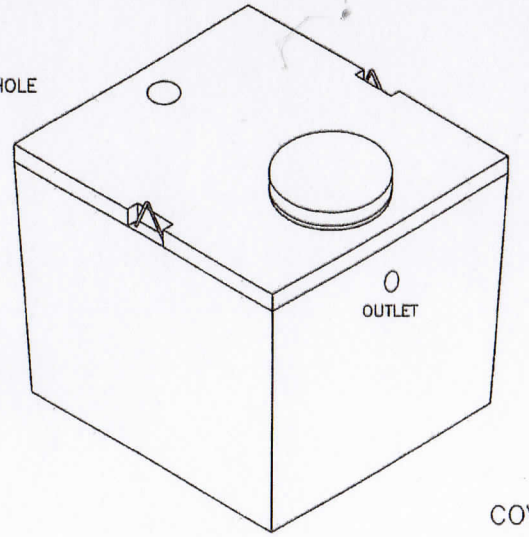

COVER: .35 CU YD CONCRETE
1,418 LBS.

TANK: 1 CU YD CONCRETE
4,050 LBS.

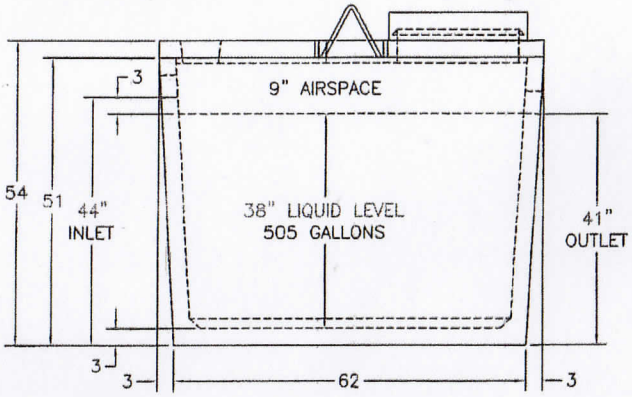

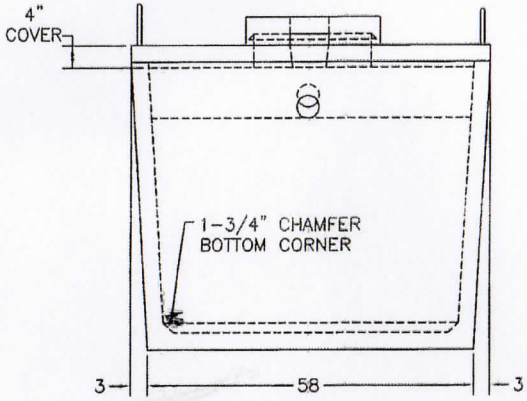

MATERIAL: REDROCK PRECAST

REDROCK PRECAST

THE SHADED CONTENTS, DESIGNS, AND PROPRIETARY INFORMATION OF R.P.I. NOT TO BE USED OR DISCLOSED TO ANY OTHER PERSON OR CO. WITHOUT WRITTEN AUTHORIZATION OF R.P.I. REPRODUCTION OF R.P.I.

ASSEMBLIES, WELDMENTS AND RAW MATERIAL TO BE FREE OF ALL DEBURR & REMOVE ALL SHARP EDGES AND CORNERS.

STANDARD TOLERANCES & NOTES UNLESS OTHERWISE SPECIFIED, DIMENSIONS ARE IN INCHES

UNSPECIFIED TOLERANCES

X ±	.XXX ±	
.XX ±	ANGLES ±	
.XXX ±	FRACTIONAL ±	

DRN. RAJ

CHKD.

APPD.

APPD. SIGNAT

MATERIAL

FINISH

TITLE 500 GALLON TANK

GROUP

DO NOT SCALE DRAWING

SIZE D

NUMBER WC001202

REV

SCALE FULL

REF

SHT OF